DATA SHEET

SKY65234-11: WLAN 802.11n Single-Band 4.9–5.85 GHz 2 x 2 MIMO Intera™ Front-End Module with 3 Antenna Ports

Features

- Single-band 4.9–5.85 GHz 2 x 2 MIMO architecture
- Two full 4.9–5.85 GHz transmit/receive chains
- 3rd antenna port provides switch diversity on both chains
- Backward-compatible with 802.11a standards
- P_{OUT} @ 2.5% EVM: 16 dBm (-11a)
- Gain matching: < 2 dB @ 5 GHz
- Single 3.0–3.6 V power supply, internal voltage regulation
- Temperature-compensated PA bias networks and directional power detection
- Separate digital controls for each PA
- Package size: 10 x 14 x 0.9 mm
- Lead (Pb)-free and RoHS-compliant MSL-3 @ 250 °C per JEDEC J-STD-020

NEW Skyworks offers lead (Pb)-free, RoHS (Restriction of Hazardous Substances)-compliant packaging.

Description

The SKY65234-11 Intera nFEM combines two complete transmit/receive chains in one compact RF front end module optimized for single-band 4.9–5.85 GHz 2 x 2 MIMO (multiple in—multiple out) operation, in compliance with the 802.11n draft standard. The SKY65230-11 includes two 5 GHz PAs, each with integrated input filtering for 3–4 GHz rejection, and two temperature-compensated, directional power detectors with 20 dB dynamic range. Also included are low loss, high rejection GaAs filters and diversity switches which provide high linearity in all transmit paths and low loss in all receive paths. Additionally, a third antenna port is added to provide switch diversity capability on both chains. All RF ports are matched to 50 Ω.

The SKY65234-11 Intera nFEM achieves outstanding gain matching between both 5 GHz transmit paths, which is a critical requirement for MIMO operation. This is accomplished though mirrored layout symmetry.

The SKY65234-11 is packaged in a lead (Pb)-free, RoHS-compliant laminate package, which measures 140 mm^2. This FEM is designed as a pin-to-pin compatible version of the SKY65230-11 for 4.9–5.85 GHz only.

Functional Block Diagram

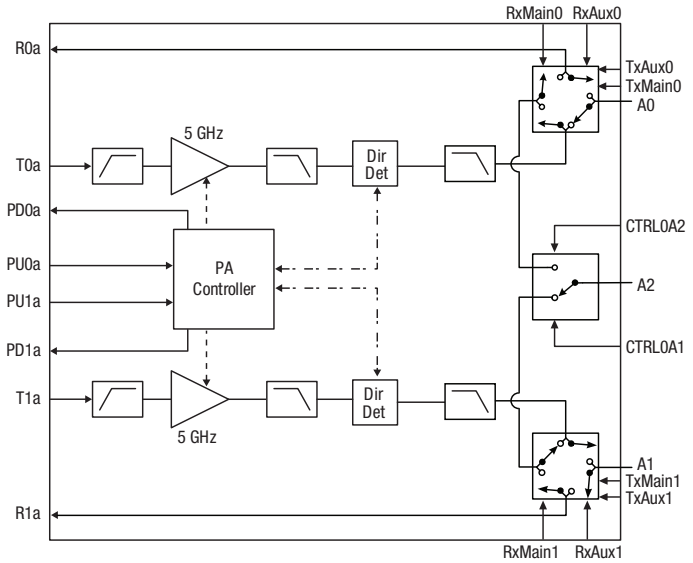

Innovation to Go™
Now available for purchase online.

Absolute Maximum Ratings

Parameter	Symbol	Condition	Min.	Typ.	Max.	Unit
V_{CC}	V_{CC}		-0.3		5.5	V
PU0a, PU1a	PU		-0.3		5.5	V
T0a,T1a	RFin				10	dBm
Operating temperature range	T_{OP}		0		85	ºC
Storage temperature range	T_{STO}		-65		125	ºC
Moisture sensitivity level	MSL-3				250	°C
Thermal resistance	θ_{JC}				60	°C/W

Performance is guaranteed only under the conditions listed in the specifications table and is not guaranteed under the full range(s) described by the Absolute Maximum specifications. Exceeding any of the absolute maximum/minimum specifications may result in permanent damage to the device and will void the warranty.

Recommended Operating Conditions

Parameter	Symbol	Condition	Min.	Typ.	Max.	Unit
Supply Voltage	V_{CC}		3	3.3	3.6	V
Operating Temperature	T_{OP}		0	25	85	ºC

DC Characteristics

Conditions: V_{CC} = 3.3 V, T_{OP} = 25 ºC. Measurements made on Skyworks EVB with all losses de-embedded. All unused ports terminated into 50 Ω unless otherwise specified.

Parameter	Symbol	Condition	Min.	Typ.	Max.	Unit
Total 802.11a Tx supply current, T0a or T1a	I_{CC}-a	P_{OUT} = 15 dBm, 54 Mbps OFDM, PU0a or PU1a = 3.3 V		180		mA
Total 802.11a Tx quiescent current, T0a or T1a	I_{CQ}-a	No RF		135		mA

PA Logic Characteristics

Conditions: V_{CC} = 3.3 V, T_{OP} = 25 ºC. Measurements made on Skyworks EVB with all losses de-embedded. All unused ports terminated into 50 Ω unless otherwise specified.

Parameter	Symbol	Condition	Min.	Typ.	Max.	Unit
Logic high voltage for PU0a, PU1a (Tx On)			2		V_{CC}	V
Logic low voltage for PU0a, PU1a (Tx Off)			0		0.5	V
Input current logic high voltage for PU0a, PU1a				100	200	µA
Input current logic low voltage for PU0a, PU1a				0.2		µA

PA Bias Control Line Truth Table

Control Pin	Logic Level = 1 (3 V)	Logic Level = 0 (0 V)
PU0a	a Band PA0 On	a Band PA0 Off
PU1a	a Band PA1 On	a Band PA1 Off

Switch Control Line Truth Tables

H = 3 V, L = 0 V, X = Don't Care

Path	RxMain0	TxMain0	RxAux0	TxAux0	Ctrl0A2	Ctrl1A2
A0-R0a	H	L	L	L	X	X
A2-R0a	L	L	H	L	H	L
A0-T0a	L	H	L	L	X	X
A2-T0a	L	L	L	H	H	L

Path	RxMain1	TxMain1	RxAux1	TxAux1	Ctrl0A2	Ctrl1A2
A1-R1a	H	L	L	L	X	X
A2-R1a	L	L	H	L	L	H
A1-T1a	L	H	L	L	X	X
A2-T1a	L	L	L	H	L	H

CAUTION: *Although this device is designed to be as robust as possible, ESD (Electrostatic Discharge) can damage this device. This device must be protected at all times from ESD. Static charges may easily produce potentials of several kilovolts on the human body or equipment, which can discharge without detection. Industry-standard ESD precautions must be employed at all times.*

802.11a Transmit Specifications (Tx Chain 0, Tx Chain 1)

Conditions: V_{CC} = 3.3 V, T_{OP} = 25 °C. PA enables and switch control voltages set according to Truth Tables in this document. Measurements made on Skyworks EVB with all losses de-embedded. All unused ports terminated into 50 Ω.

Parameter	Symbol	Condition	Min.	Typ.	Max.	Unit
Frequency range	F		4.9		5.85	GHz
Linear output power - a	Plin_a	54 Mbps OFDM, 64 QAM, EVM = 2.5 %		16		dBm
Backed off EVM	BEVM	54 Mbps OFDM, 64 QAM, P_{OUT} = 7 dBm		1.5		%
1 dB compression point	$P_{1\ dB}$		21.5	24		dBm
Small signal gain	$\|S_{21}\|$			24		dB
Small signal gain variation over any 20 MHz band	$\Delta\|S_{21}\|$				0.5	dB
Gain matching, T0a to A0 vs. T1a to A1	$\|S_{21}\|$ - M	Compared frequency by frequency		2		dB
Gain, 3.2–3.9 GHz	$\|S_{21}\|$ - 3.9			0		dB
Harmonics	2f, 3f	P_{OUT} = 15 dBm, OFDM542		-50	-42	dBm/MHz
Tx switching time	t_sw	50 % of V_{CTL} to 90/10 % RF output power level			500	ns
Input return loss	$\|S_{11}\|$	T0a or T1a		-6		dB
Output return loss	$\|S_{22}\|$	A0 or A1		-10		dB
Isolation between T0g and A1	ISO-A1	CW power into T0a and measure ratio of power at A0 to A1			-25	dBc
Isolation between T1g and A0	ISO-A0	CW power into T1a and measure ratio of power at A1 to A0			-25	dBc
Stability	STAB	$P_{OUT} \leq$ 18 dBm, load VSWR = 3:1	All non-harmonically related outputs less than -50 dBc/1 MHz			

802.11a Receive Specifications (Rx Chain 0, Rx Chain 1)

Conditions: V_{CC} = 3.3 V, T_{OP} = 25 °C. PA enables and switch control voltages set according to Truth Tables in this document. Measurements made on Skyworks EVB with all losses de-embedded. All unused ports terminated into 50 Ω.

Parameter	Symbol	Condition	Min.	Typ.	Max.	Unit
Frequency range	F		4.9		5.85	GHz
Insertion loss	$\|S_{21}\|$			2.5	3	dB
Input return loss	$\|S_{11}\|$	R0a or R1a		-20		dB
Output return loss	$\|S_{22}\|$	A0 or A1		-15		dB
Insertion loss delta	$\|\Delta S_{21}\|$	A0 to R0a and A1 to R1a			0.5	dB

802.11a Power Detector Specification

Conditions: V_{CC} = 3.3 V, T_{OP} = 25 °C. PA enables and switch control voltages set according to Truth Tables in this document. Measurements made on Skyworks EVB with all losses de-embedded. All unused ports terminated into 50 Ω.

Parameter	Symbol	Condition	Min.	Typ.	Max.	Unit
Frequency range	F		4.9		5.85	GHz
Power detect range	PDR	A0 or A1	0		20	dBm
Power detector accuracy	PDacc5	Over 3:1 VSWR		0.7		dB
DC load impedance	Zload				3	kΩ
Output voltage, no RF			0.75		0.95	V
Output voltage, 18 dBm				0.35		V
Power detector -3 dB corner frequency	LPF-3 dB	10 kΩ load	270	300	400	kHz

802.11a Transmit Specifications (Tx Chain 2)

Conditions: V_{CC} = 3.3 V, T_{OP} = 25 °C. PA enables and switch control voltages set according to Truth Tables in this document. Measurements made on Skyworks EVB with all losses de-embedded. All unused ports terminated into 50 Ω.

Parameter	Symbol	Condition	Min.	Typ.	Max.	Unit
Frequency range	F		4.9		5.85	GHz
Linear output power - a	Plin_a	54 Mbps OFDM, 64 QAM, EVM = 2.5 %		15.5		dBm
Backed off EVM	BEVM	54 Mbps OFDM, 64 QAM, P_{OUT} = 7 dBm		1.5		%
1 dB compression point	$P_{1\ dB}$		21.5	24		dBm
Small signal gain	$\|S_{21}\|$			24		dB
Small signal gain variation over any 20 MHz band	$\Delta\|S_{21}\|$				0.5	dB
Gain matching, T0a to A0 vs. T1a to A1	$\|S_{21}\|$- M	Compared frequency by frequency		2		dB
Gain, 3.2–3.9 GHz	$\|S_{21}\|$ - 3.9			0		dB
Harmonics	2f, 3f	P_{OUT} = 15 dBm, OFDM542		-50	-42	dBm/MHz
Tx switching time	t_sw	50 % of V_{CTL} to 90/10 % RF output power level			500	ns
Input return loss	$\|S_{11}\|$	T0a or T1a		-6		dB
Output return loss	$\|S_{22}\|$	A2		-10		dB
Isolation between T0g and A1	ISO-A1	CW power into T0a and measure ratio of power at A0 to A1			-25	dBc
Isolation between T1g and A0	ISO-A0	CW power into T1a and measure ratio of power at A1 to A0			-25	dBc
Stability	STAB	$P_{OUT} \leq$ 18 dBm, load VSWR = 3:1	All non-harmonically related outputs less than -50 dBc/1 MHz			

802.11a Receive Specifications (Rx Chain 2)

Conditions: V_{CC} = 3.3 V, T_{OP} = 25 °C. PA enables and switch control voltages set according to Truth Tables in this document. Measurements made on Skyworks EVB with all losses de-embedded. All unused ports terminated into 50 Ω.

Parameter	Symbol	Condition	Min.	Typ.	Max.	Unit
Frequency range	F		4.9		5.85	GHz
Insertion loss	$\|S_{21}\|$			3	3.5	dB
Input return loss	$\|S_{11}\|$	R0a or R1a		-20		dB
Output return loss	$\|S_{22}\|$	A2		-15		dB
Insertion loss delta	$\|\Delta S_{21}\|$	A2 to R0a and A2 to R1a			0.5	dB

802.11a Power Detector Specification

Conditions: V_{CC} = 3.3 V, T_{OP} = 25 °C. PA enables and switch control voltages set according to Truth Tables in this document. Measurements made on Skyworks EVB with all losses de-embedded. All unused ports terminated into 50 Ω.

Parameter	Symbol	Condition	Min.	Typ.	Max.	Unit
Frequency range	F		4.9		5.85	GHz
Power detect range	PDR	A0 or A1	0		20	dBm
Power detector accuracy	PDacc5	Over 3:1 VSWR		0.7		dB
DC load impedance	Zload				3	kΩ
Output voltage, no RF			0.75		0.95	V
Output voltage, 18 dBm				0.35		V
Power detector -3 dB corner frequency	LPF-3 dB	10 kΩ load	270	300	400	kHz

Typical Performance Data (4.9–5.85 GHz)

V_{CC} = 3.3 V, T_A = 25 °C, OFDM 54 Mbps, Z_0 = 50 Ω, unless otherwise noted

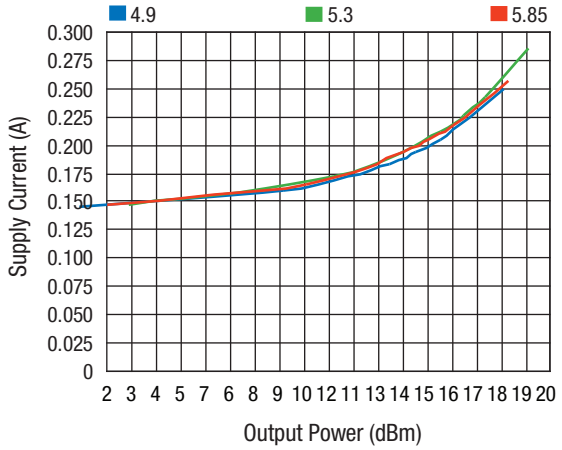

Supply Current vs. Output Power

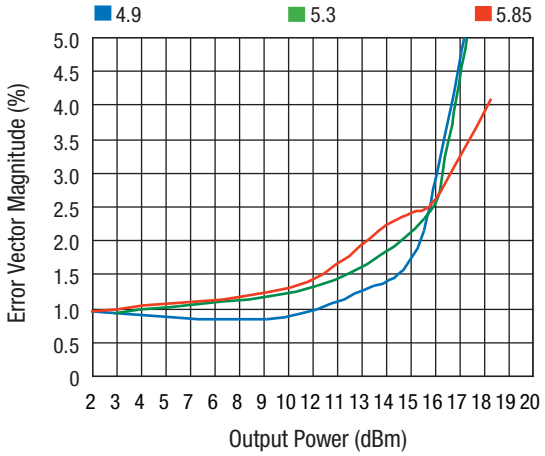

EVM vs. Output Power

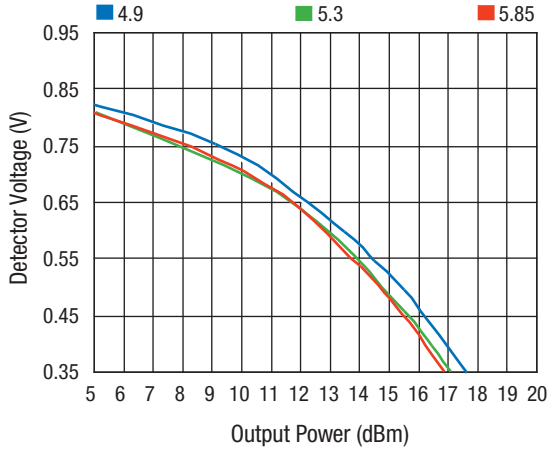

Detector Voltage vs. Output Power

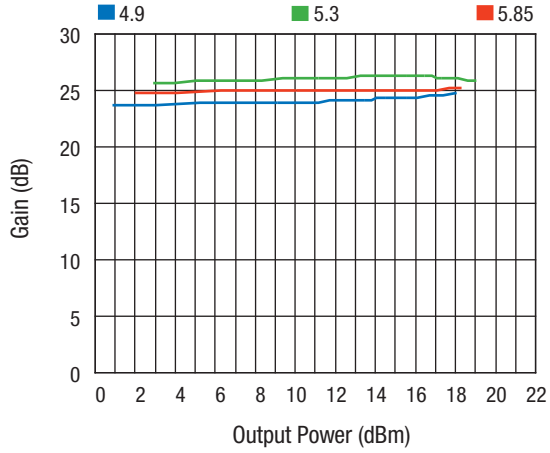

Gain vs. Output Power

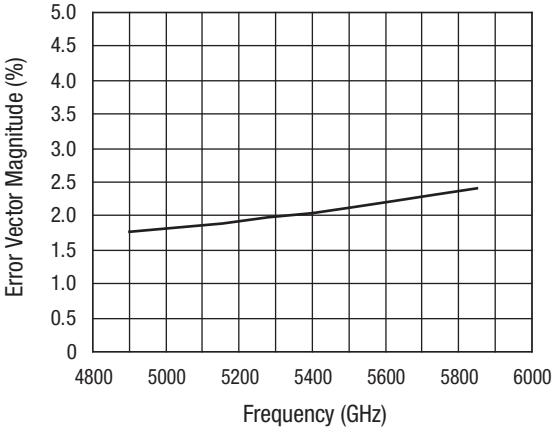

EVM vs. Frequency @ P_{OUT} = 15 dBm

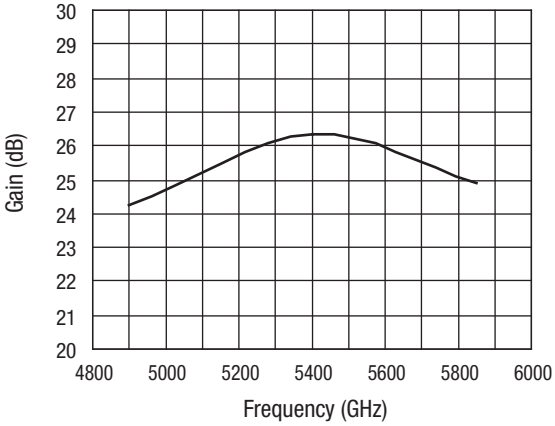

Gain vs. Frequency

Module Pin Out

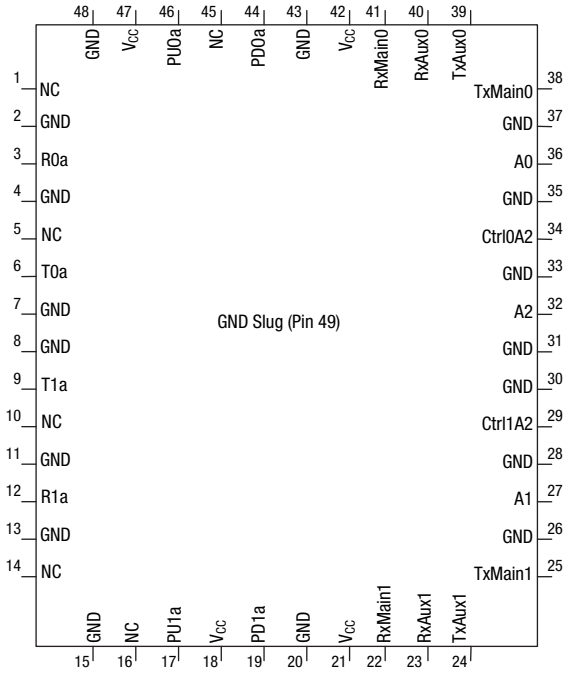

Pin Descriptions

Pin #	Name	Description
1	NC	No connection
2	GND	Ground
3	R0a	Receiver output
4	GND	Ground
5	NC	No connection
6	T0a	Transmitter input
7	GND	Ground
8	GND	Ground
9	T1a	Transmitter input
10	NC	No connection
11	GND	Ground
12	R1a	Receiver output
13	GND	Ground
14	NC	No connection
15	GND	Ground
16	NC	No connection
17	PU1a	Power amp enable input
18	V_{CC}	3.3 V
19	PD1a	Power detector 1 output
20	GND	Ground
21	V_{CC}	3.3 V
22	RxMain1	Diversity switch control input
23	RxAux1	Diversity switch control input
24	TxAux1	Diversity switch control input
25	TxMain1	Diversity switch control input
26	GND	Ground
27	A1	Antenna 1
28	GND	Ground
29	Ctrl1A2	TR switch control input
30	GND	Ground
31	GND	Ground
32	A2	Antenna 2
33	GND	Ground
34	Ctrl0A2	TR switch control input
35	GND	Ground
36	A0	Antenna 0
37	GND	Ground
38	TxMain0	Diversity switch control input
39	TxAux0	Diversity switch control input
40	RxAux0	Diversity switch control input
41	RxMain0	Diversity switch control input
42	V_{CC}	3.3 V
43	GND	Ground
44	PD0a	Power detector 0 output
45	NC	No connection
46	PU0a	Power amp enable input
47	V_{CC}	3.3 V
48	GND	Ground
49	GND	Ground

Recommended Footprint

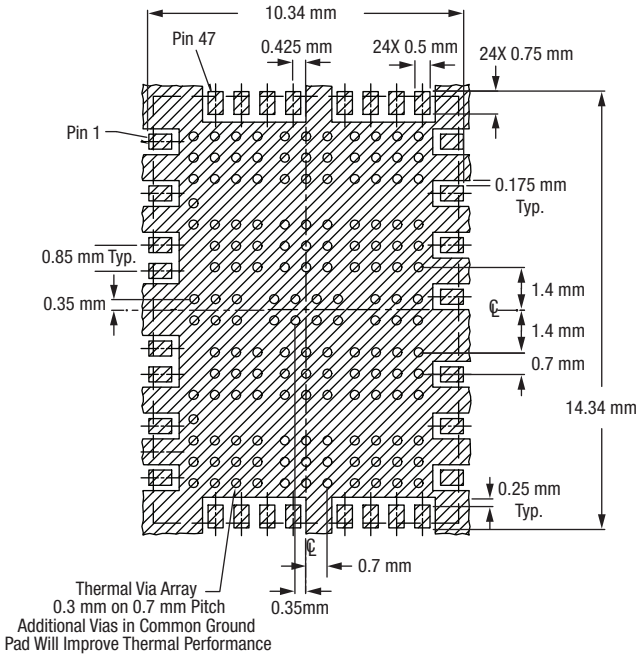

Thermal vias should be tented and filled with solder mask 30–35 µm copper plating recommended.

Solder Mask

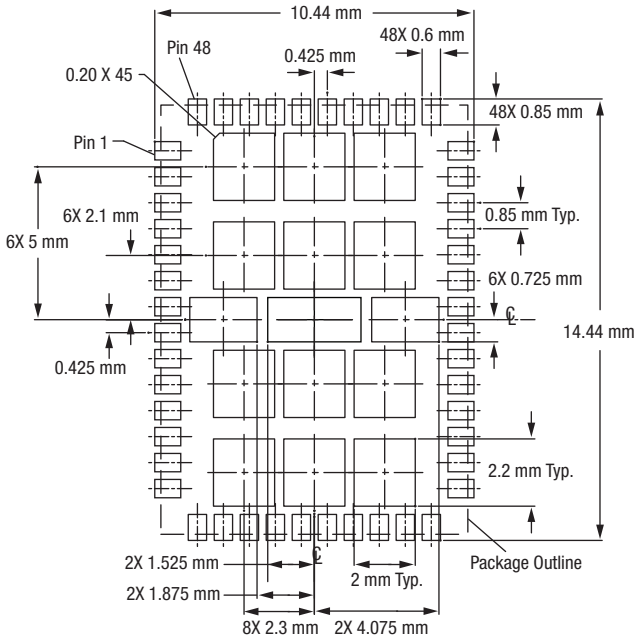

Stencil Pattern

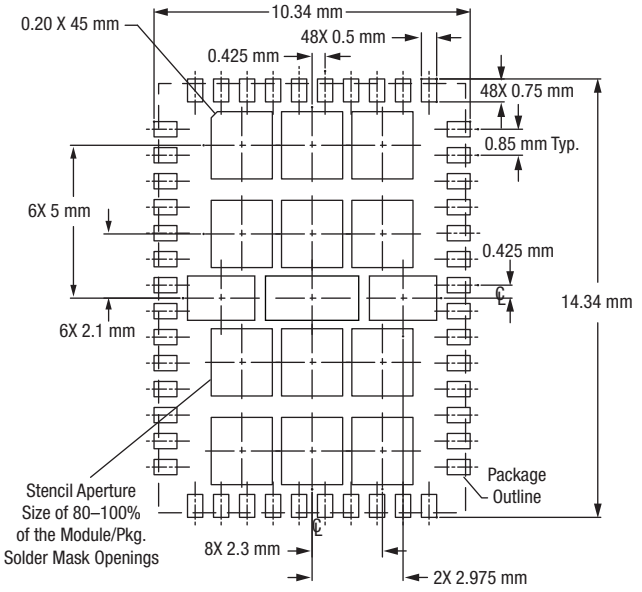

Package Outline

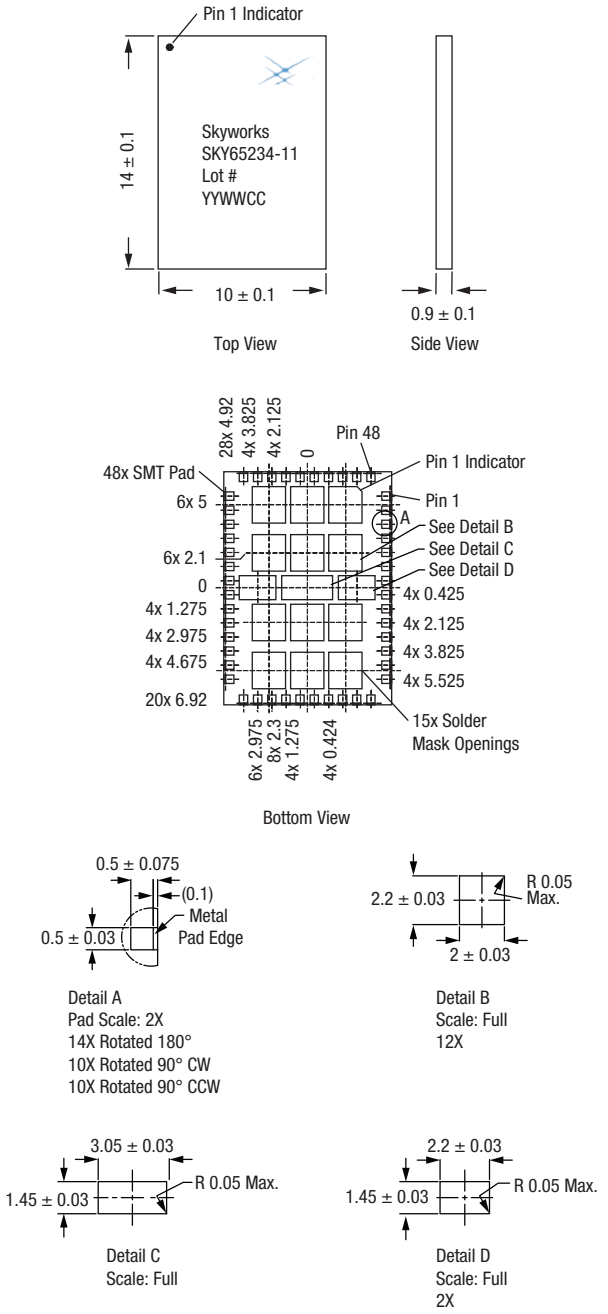

Copyright © 2006, 2007, Skyworks Solutions, Inc. All Rights Reserved.

Information in this document is provided in connection with Skyworks Solutions, Inc. (“Skyworks”) products or services. These materials, including the information contained herein, are provided by Skyworks as a service to its customers and may be used for informational purposes only by the customer. Skyworks assumes no responsibility for errors or omissions in these materials or the information contained herein. Skyworks may change its documentation, products, services, specifications or product descriptions at any time, without notice. Skyworks makes no commitment to update the materials or information and shall have no responsibility whatsoever for conflicts, incompatibilities, or other difficulties arising from any future changes.

No license, whether express, implied, by estoppel or otherwise, is granted to any intellectual property rights by this document. Skyworks assumes no liability for any materials, products or information provided hereunder, including the sale, distribution, reproduction or use of Skyworks products, information or materials, except as may be provided in Skyworks Terms and Conditions of Sale.

THE MATERIALS, PRODUCTS AND INFORMATION ARE PROVIDED “AS IS” WITHOUT WARRANTY OF ANY KIND, WHETHER EXPRESS, IMPLIED, STATUTORY, OR OTHERWISE, INCLUDING FITNESS FOR A PARTICULAR PURPOSE OR USE, MERCHANTABILITY, PERFORMANCE, QUALITY OR NON-INFRINGEMENT OF ANY INTELLECTUAL PROPERTY RIGHT; ALL SUCH WARRANTIES ARE HEREBY EXPRESSLY DISCLAIMED. SKYWORKS DOES NOT WARRANT THE ACCURACY OR COMPLETENESS OF THE INFORMATION, TEXT, GRAPHICS OR OTHER ITEMS CONTAINED WITHIN THESE MATERIALS. SKYWORKS SHALL NOT BE LIABLE FOR ANY DAMAGES, INCLUDING BUT NOT LIMITED TO ANY SPECIAL, INDIRECT, INCIDENTAL, STATUTORY, OR CONSEQUENTIAL DAMAGES, INCLUDING WITHOUT LIMITATION, LOST REVENUES OR LOST PROFITS THAT MAY RESULT FROM THE USE OF THE MATERIALS OR INFORMATION, WHETHER OR NOT THE RECIPIENT OF MATERIALS HAS BEEN ADVISED OF THE POSSIBILITY OF SUCH DAMAGE.

Skyworks products are not intended for use in medical, lifesaving or life-sustaining applications, or other equipment in which the failure of the Skyworks products could lead to personal injury, death, physical or environmental damage. Skyworks customers using or selling Skyworks products for use in such applications do so at their own risk and agree to fully indemnify Skyworks for any damages resulting from such improper use or sale.

Customers are responsible for their products and applications using Skyworks products, which may deviate from published specifications as a result of design defects, errors, or operation of products outside of published parameters or design specifications. Customers should include design and operating safeguards to minimize these and other risks. Skyworks assumes no liability for applications assistance, customer product design, or damage to any equipment resulting from the use of Skyworks products outside of stated published specifications or parameters.

Skyworks, the Skyworks symbol, “Breakthrough Simplicity” and Intera are trademarks or registered trademarks of Skyworks Solutions, Inc., in the United States and other countries. Third-party brands and names are for identification purposes only, and are the property of their respective owners. Additional information, including relevant terms and conditions, posted at www.skyworksinc.com, are incorporated by reference.