P/N	(A)	(B)
BASIC	(.116)	(.150)
-1	(.095)	(.150)
-2	(.116)	(.140)
-3	(.095)	(.115)

REVISIONS				
ZONE	REV	DESCRIPTION	DATE	BY
–	A	ECO 18730 (ADD -3)	09.19.05	DKN

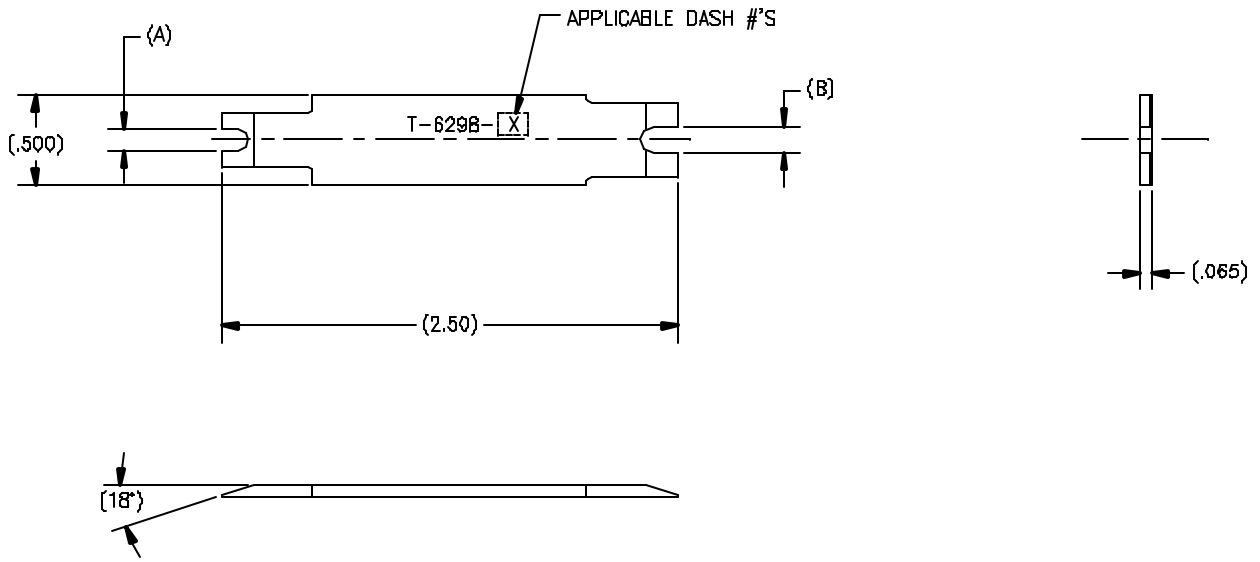

DRAWING NO.	REV
T-6298	A

APPLICABLE TENSOLITE DOCUMENTS		
WORK STD	PROD INST	ASSY INST
NA	NA	NA

NOTICE

THIS DRAWING EMBODIES A CONFIDENTIAL PROPRIETARY DESIGN GENERATED BY TENSOLITE COMPANY AND ALL DESIGN, MANUFACTURING REPRESENTATION, USE AND SALE RIGHTS REMAIN THE SOLE AND EXCLUSIVE RESTRICTED. IT IS TRANSMITTED UNDER A CONFIDENTIAL RELATIONSHIP FOR A RESTRICTED PURPOSE AND THE RECIPIENT AGREES BY ACCEPTING THIS DRAWING NOT TO SUPPLY OR DISCLOSE ANY INFORMATION REGARDING IT TO ANY UNAUTHORIZED PERSON, TO INCORPORATE IN OTHER PROJECTS ANY SPECIAL FEATURES PECULIAR TO THIS DESIGN, ALL PATENT RIGHTS HEREIN ARE EXPRESSLY RESERVED BY TENSOLITE COMPANY, LONG BEACH, CALIFORNIA 90815.

TOLERANCES AND NOTES
EXCEPT AS NOTED

DIMENSIONS ARE IN INCHES.
LINEAR .XX ± .010, .XXX ± .005 ANGULAR ± 1/2°
FRACTION ± 1/32

1. MACHINE FINISH: ✓ RMS
2. BREAK ALL SHARP EDGES .020 MAX.
3. MACHINE FILLETS .XX15 MAX.
4. MACHINE SURFACES SQUARE TO RESPECTIVE AXIS WITHIN .005 INCHES PER INCH.
5. MACHINE DIRECTIONS CONCENTRIC WITHIN .005 T.I.R.
6. DIMENSIONS TO BE NOT BEFORE PLATING.
7. SHAFTS ALL THREADS 45°.
8. THREADS PER H-28
9. REMOVE FRAYED EDGES ON TEFLON.
10. REMOVE ALL BURRS.

–		–	–	–	
MATERIAL		SIZE	SPECIFICATION	REQUIREMENT	
NEXT ASSY		Tensolite HIGH PERFORMANCE CABLES & INTERCONNECT SYSTEMS Long Beach, California 90815			
APPROVAL INITIALS	DATE	TITLE SSMP & SMP FEMALE WITHDRAWAL TOOL			
DRAWN BY ATV	08.02.99				
CHECKED					
QUALITY		SCALE 2/1	SUB-DIRECTORY/VOLUME DL	SHEET 1 OF 1	
ENGINEERING PMAD	09.19.05	SIZE C	SIZE CODE 30990	DRAWING NO. T-6298	REV A

ENG-DWG REV. A